IMEX
BATH EQUIPMENTS

PRODUCT INFORMATION SUMMARY

DELOS
Series

IMEX
BATH EQUIPMENTS

Ref.	EAN	Finish
BDD055-2AC	8435668037952	316

DELOS
Series

IMEX
BATH EQUIPMENTS

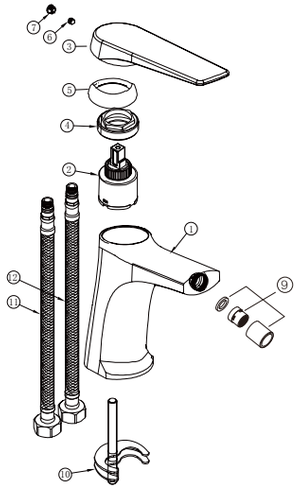

CODE	NAME	MATERIAL	REF
1	Faucet body	Brass	
2	Cartridge Ø28mm	Assembly	CRT087*
3	Handle	Zinc	
4	O-ring	NBR	
5	Cap	Brass	
6	Cover plate	Brass	
7	M5x6 inner six corner set screws	SUS 304	
8	Color button	ABS	
9	Aerator	Assembly	SAT-AIR032/AC*
10	Pack	SUS 304	
11	Inlet hose	SUS 304	
12	Connecting Pipe	TAQ-PEX-DN6-ACB H3/8-M10X1 L12-500-R&B	SAT-HOSES7*

* CONSULTAR PARA ACABADOS DE COLOR

DELOS
Series

IMEX
BATH EQUIPMENTS

Installing instruction

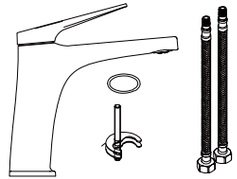

Step 1.Check all spare parts ready

Step 2. Install inlet pipe to faucet body

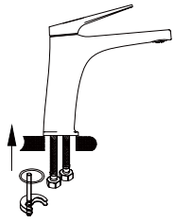

Step 3.Install screw stick to faucet body

FLOW RATE

Detalles	
FLOW RATE REF	BDD055-2AC
mixer water 0.1Mpa(L/MIN)	3.1
mixer water 0.3Mpa(L/MIN)	6.7
mixer water 0.5Mpa(L/MIN)	8.9
singer cold water 0.1Mpa(L/MIN)	2.8
singer cold water 0.3Mpa(L/MIN)	6.2
singer cold water 0.5Mpa(L/MIN)	9.5

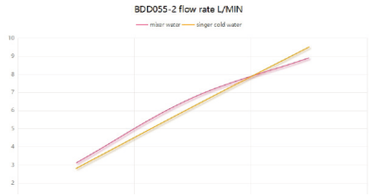

DELOS
Series

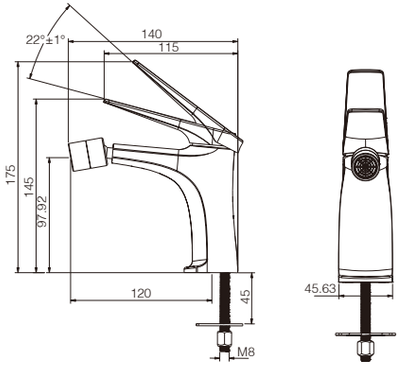

Units : mm

Product sizes (cm)	30*21*6
Weight (kg)	1.21
Guarantee	10 years
Max Preassure (bar)	6
Min Preassure (bar)	0.5
Optimum preassure (bar)	1-4 (Recommended 3)
Max. temperature	85ºC
Min temperature	65ºC

DELOS
Series

CERTIFIES

That all our products, provided that they are used in normal conditions or installed in accordance with current standards, are guaranteed against any manufacturing defect for a period of five years, except for products purchased before January 1, 2020, which will have the mand atory coverage of 2 years from the date of invoice.

Requirements and exclusions

Failure to comply with the instructions for assembly, use and maintenance of our products on the packaging and in our catalogue and published on our website: www.imexproducts.es, releases IMEX PRODUCTS, S.L. from any liability.

In any case, the acceptance of the defect by our technical department is necessary. In addition, transport costs will be charged only in the event that on IMEX PRODUCTS, S.L. technician determines the proper functioning of our products.

IMEX PRODUCTS, S.L. will decide to repair the product or replace it. It will be necessary to present the purchase invoice.

Assemnly, maintenance or repairs carried out by non-specoalists re excluded from the warranty.

Wearing parts such as hoses, handles, seals, filters, aerators, etc. are not covered by the warranty.